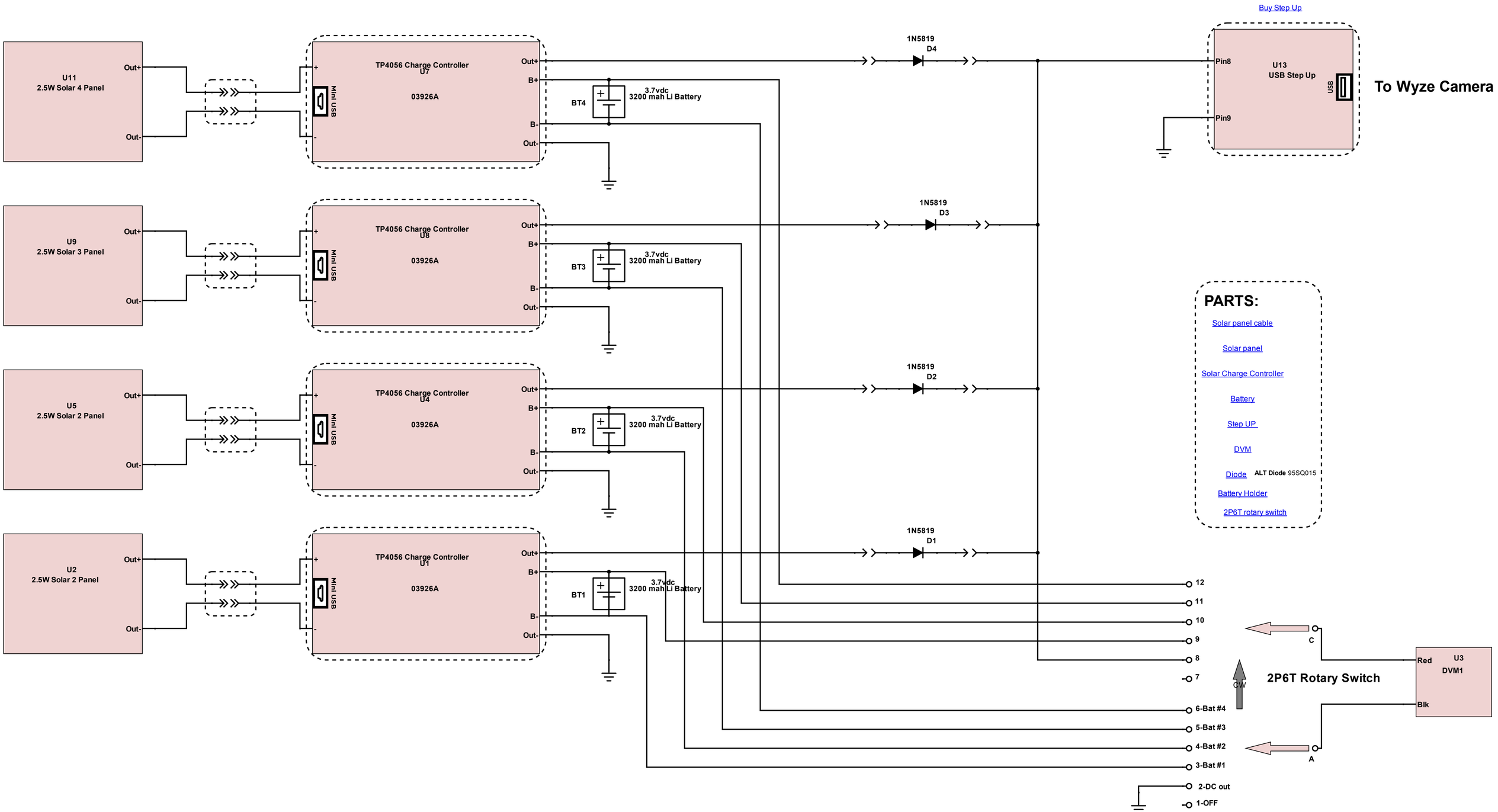
Buy Step Up
U11
2.5W Solar 4 Panel
Out+
Out-
U9
2.5W Solar 3 Panel
U5
2.5W Solar 2 Panel
U2
2.5W Solar 2 Panel
TP4056 Charge Controller
U7
U8
U4
U1
03926A
Mini USB
B+
B-
BT4
BT3
BT2
BT1
3.7vdc
3200 mah Li Battery
1N5819
D4
D3
D2
D1
U13
USB Step Up
Pin8
Pin9
USB
To Wyze Camera
PARTS:
Solar panel cable
Solar panel
Solar Charge Controller
Battery
Step UP
DVM
Diode
ALT Diode 95SQ015
Battery Holder
2P6T rotary switch
12
11
10
9
8
7
6-Bat #4
5-Bat #3
4-Bat #2
3-Bat #1
2-DC out
1-OFF
C
A
CW
2P6T Rotary Switch
U3
DVM1
Red
Blk